P.A. – S.p.A. – EQUIPAGGIAMENTI TECNICI DEL LAVAGGIO
VIA MILANO, 13 – CASELLA POSTALE 115 – 42048 RUBIERA (REGGIO EMILIA) – ITALY
Tel. +39 0522 623611 – Fax. +39 0522 629600 – R.E.A. RE 156319 – R.I. RE11535 – Mecc. RE 013446
C.F. e P. IVA 01035950359 – Cap. Soc. i.v. € 750.000,00 – Codice Identificativo C.E.E. IT 01035950359
ART. 2497 – BIS C.C. DIREZIONE E COORDINAMENTO BENETTI srl R.I. TRIB. DI RE 01480690351
Web: http://www.pa-etl.it – **E-mail:** info@pa-etl.it

RL84 Spray Gun – 500 bar – 50 MPa

Technical manual: E 130

Gun suitable for use with 500 bar – 50 MPa rated pressure pumps.

DN15

- **30.5400.00** RL84 G1/2 FF
- **30.5000.40** Extension 400 G1/2 1/4Npt FF
- **30.5000.80** Extension 800 G1/2 1/4Npt FF
- **30.5000.92** Extension 1250 G1/2 1/4Npt FF

- Covered by shockproof plastic semi-housings
- Sturdy construction of Sst & brass with dynamic teflon seals
- Assembly on hoses equipped with G 1/2" fittings
- Entirely built of Sst & body in brass
- Ergonomic construction
- Minimum fatigue for trigger opening
- Minimum load loss (see chart)

TECHNICAL SPECIFICATIONS

P/N	RATED PRESSURE bar - MPa	PERMISSIBLE PRESSURE bar - MPa	MAX FLOW RATE l/min	(1) MAX TEMPERATURE °C	INLET OUTLET	WEIGHT gr
30.5400.00	500 - 50	560 - 56	80	100	G1/2 F-F	1417
30.5000.40	500 - 50	560 - 56	80	100	G1/2 1/4Npt FF	865
30.5000.80	500 - 50	560 - 56	80	100	G1/2 1/4Npt FF	1480
30.5000.92	500 - 50	560 - 56	80	100	G1/2 1/4Npt FF	2150

(1) The gun has been designed for continuous use, at a water temperature of 60°C (140°F). It can resist at the max temperature of 100°C (210°F) for short periods only, as, when the gun shuts off, the heater continues to transmit the heat to the water, thus increasing both temperature and pressure up to high, dangerous values.
Using the gun at a water temperature higher than 60°C involves for the operator the use of adequate safety devices, such as gloves, etc.

Attention ! ! !

In order to prevent any risk of INSTABILITY of the gun due to pressure spikes, CHECK in the enclosed CHART (fig. 3) the use of safety devices (SHOULDER REST) in function of the Pressure / Flow Rate parameters.

Instruction manual, maintenance, installation, spare parts. For a correct utilization, follow the directions of this manual **Re-print them on the Use and Maintenance booklet of the machine.**	n. 12.9130.00

DIMENSIONAL DRAWING

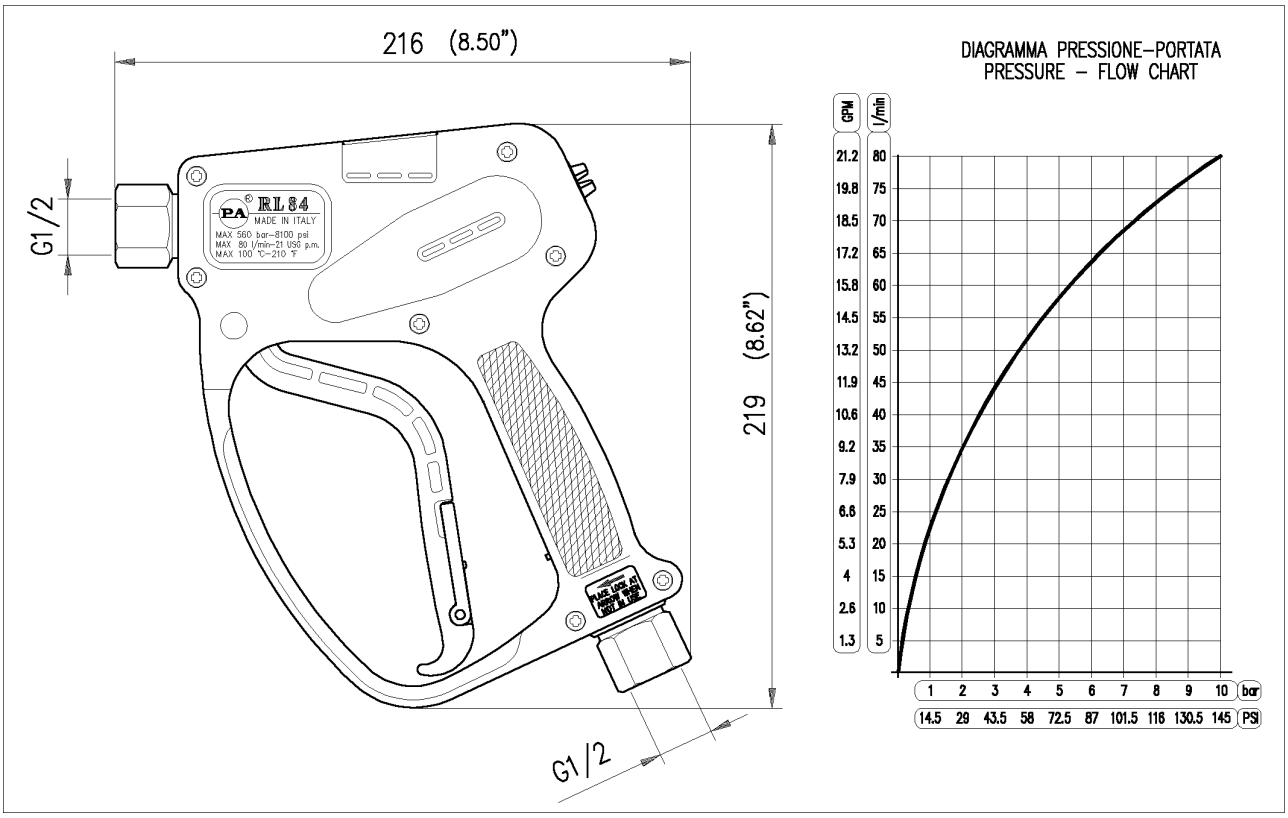

INSTRUCTIONS

This product is to be utilized with clean fresh water, even slightly additivated with normal detergents. For use involving different or corrosive liquids, contact the PA Technical department. Appropriate filtration should be installed when using unclean liquids. Choose the gun in line with the data of nominal running (system rated pressure, max flow and max temperature). In any case, the pressure of the machine should not exceed the permissible pressure rate imprinted on the gun.

INSTALLATION

This gun was designed to operate with **hot water** (in compliance with the technical specs). Provide the plant generating **hot water** with an equipment limiting the incidental increase of the fluid temperature.

Always fit a safety valve to protect the delivery conduct when the latter is under pressure.

Choose a suitable nozzle and ad just the valve mounted in the front of the gun, thus obtaining a constant supply and avoiding unpleasant pressure spike when closing the system.

If the nozzle wears out, the pressure falls. When you install a new nozzle, adjust the system back to the original pressure.

OPERATIONS

The gun opens and closes a high pressure conduct by means of a piston acting on a seat; the return is controlled by a spring which releases the trigger.

WATER HOSE FEED

By high or very unsteady pressure values on delivery, it is necessary to mount a pressure reducer , both to level the flow rate on delivery and to protect the system components.

PROBLEMS AND SOLUTIONS

PROBLEMS	PROBABLE CAUSES	SOLUTIONS
Leakage from the nozzle side of the gun	Presence of impurities Gun seat worn out	Clean Replace the seat
Leakages from the seals	Seals worn out	Replace the seals
The trigger opens up with difficulty	The pressure inside the circuit is too high	Check the bypass valve and adjust it if necessary

REGULATIONS

The project and construction of our guns comply with: the essential safety requirements presented in Enclosure 1of NORM 97/23/CE (PED) dated 29 May1997; norm CEI EN 60335-2-79 first edition, published in 1999-03; the regulating project prEN1829. REMARK: The conformity of the gun to the safety requirements is shown by the "CE 0409" marking applied on the gun itself.

They bear the markings provided for by the law.

Read this manual before starting the assembly.

For a correct utilization, follow the directions described in this manual and re-print them on the Use and maintenance manual of the machine.

Make sure that you are given **the Original Conformity Declaration** for the accessory chosen. The present manual is valid for all the guns named **RL 84.**

HOW TO RECOGNIZE IT

Printed on the valve body: Technical specs PA Logo Name of the product CE marking

SPARES

Use original PA spares only in order to get both a correct operation and a long lasting, reliable product.

MAINTENANCE

Maintenance has to be carried out by **Specialized Technicians.**

STANDARD: every 400 working hours (circa 10,000 cycles), check and lubricate the seals with water resistant grease.

SPECIAL: every 800 working hours(circa 20,000 cycles), check the wear of the seals and internal parts and if necessary, replace with original PA parts, taking care during installation to lubricate with water resistant grease.

CAUTION: re-assemble the gun restoring the original conditions.

The manufacturer is not to be considered responsible for damage as a result from incorrect fitting and maintenance-

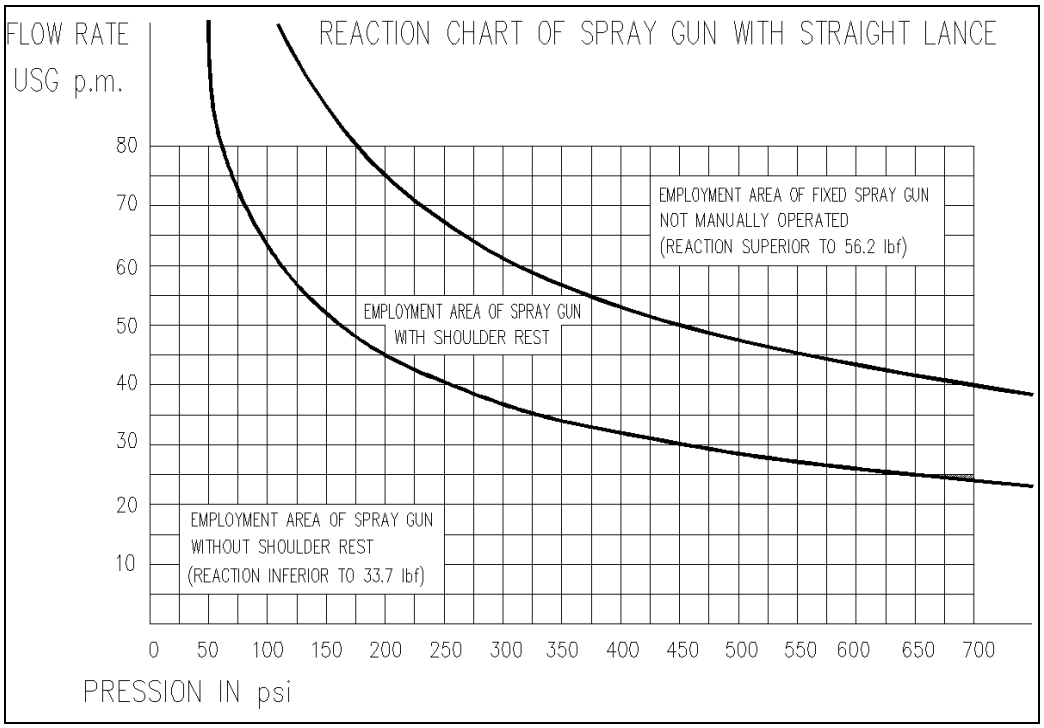

(fig. 3)

Technical data, descriptions and illustrations are indicative and liable to modification without notice

30.5000.40 Lan.sst. RL84-RL204 1/2M Bsp 400mm
30.5000.80 Lan.sst. RL84-RL204 1/2M Bsp 800mm
30.5000.92 Lan.sst. RL84-RL204 1/2M Bsp 1250mm
30.5030.80 Lan.sst. 1/2M Bsp Mx 1/4 Bsp M 800mm
30.5400.00 RL 84 spr.gun 1/2FF Bsp

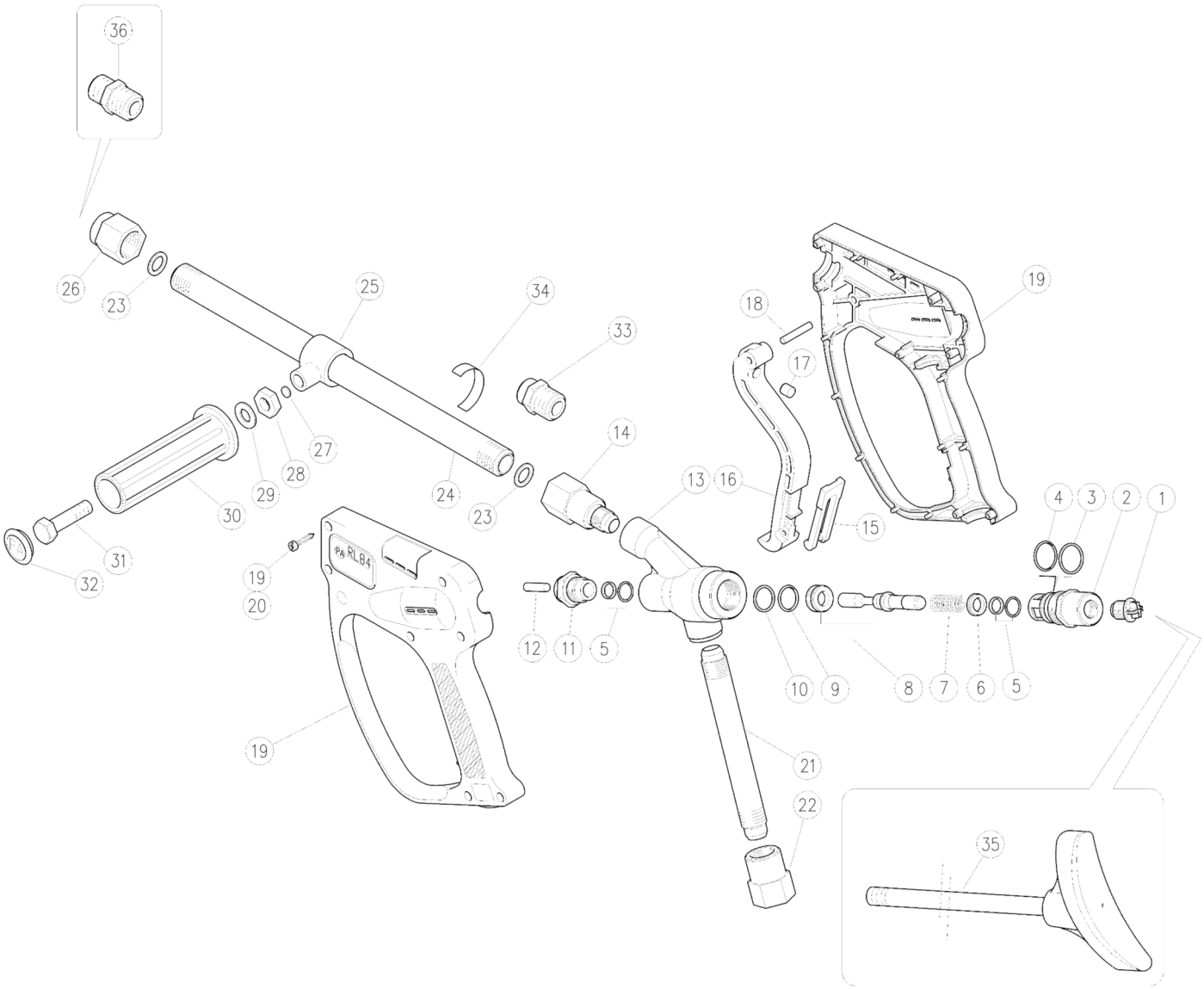

Pos.	P/N	Description	Q.ty	K1	K2	K3	K4	
1	30.5815.84R	Plug, 1/4M Bsp DIN259 Plast. black	1					10
2	30.5408.31R	Spring holder	1					5
3	10.4041.00R	Back-up ring, 19,3x22x1,2 mm PTFE	1	•				10
4	10.3070.02R	O-ring, 1,78x18,77 mm Ni 85	1	•				10
5	10.2027.00R	Stem seal, 10x15x2,2 mm +O-ring	2	•				4
6	30.4040.31R	Spacer ring, 10,1x15,8x3,8 mm brass	1					3
7	30.4042.51R	Spring, 2,4x15,3x30 mm Sst.	1	•				10
8	30.3254.24R	Piston + seat -RL84-RP 80/500	1	•				3
9	10.3066.01R	O-ring, 1,78x15,6 mm Ni 85	1	•				10
10	10.4042.00R	Back-up ring, 16,3x19x1,2 mm	1	•				10
11	30.4038.31R	Front plug, M18x1,5 brass	1					10
12	30.4041.31R	Parallel pin, 6x25,8 mm brass	1					5
13	30.5405.35R	Housing -RL84, brass	1					1
14	30.5403.51R	Coupling, 1/2" Bsp sst.	1					3
15	30.1510.84R	Safety latch, PA red	1					10
16	30.5303.84R	Trigger, black	1					5
17	30.0674.51R	Stop pin, 8x6,9mm Sst.	1					10
18	30.2517.31R	Parallel pin, 5x27,5 mm brass	1					10
19	30.5412.24	Casing kit -RL 84 + screws	1					1
20	16.3075.51R	S/tapping scr. 3,5x18 mm sst.	7					10

Pos.	P/N	Description	Q.ty	K1	K2	K3	K4	
21	30.5407.56R	Back tube,M16Mx1,5M 141,5 mm Sst.	1					5
22	30.5406.51R	Coupling, 1/2" Bsp Sst.	1					5
23	14.3802.00R	Washer, 12x18x1,5 mm Cu	2					10
24	30.5016.569	Tube, 1/2Bsp MM 390 mm Sst. (1) **	1					1
24	30.5026.569	Tube, 1/2Bsp MM 790 mm Sst. (2) **	1					1
24	30.5037.569	Tube, 1/2Bsp MM 1250mm Sst. (3) **	1					1
25	30.5017.35R	Tube fastener, 1/2" Bsp	1		•			5
26	30.5015.51R	Nozzle Holder, 1/2F Bsp-1/4F Npt Sst.	1					3
26	13.5080.51R	Sst. coupling, 1/2 F-1/4 M Bsp -60MPa (4)	1					5
27	13.5305.00R	Plate, 8x1,5 mm Cu	2		•			10
28	11.4627.00R	Hex. nut, M10	1		•	•		10
29	14.3799.00R	Washer, 10x21x2 mm	1		•	•		10
30	41.0409.84R	Knob, 32x115 mm PP black	1		•	•		10
31	16.2035.00R	Screw, DIN933 M10x35 mm z.pl.	1		•	•		10
32	41.0411.84R	Plug, Knob PP black	1		•	•		10
33	30.5018.51R	Nzl.holder,sst, RL84-RL204 1/2M Bsp **	1					1
34	15.3815.00	Label "56MPa Tubo inox - PA"	1					1
35	30.5060.00	Shoulder rest -RL600 1/4M Bsp 300mm **	1					5
36	13.5009.51R	Sst Nipple,. 1/4MM Bsp-Npt **	1					5

** On request

Last updated 17/03/2026

Kit	P/N	Description	
K1	30.3256.24	Spare kit RL84-RP80/500 8x1 pcs,	1
K2	30.5038.24	Spares kit -Lance knob	1
K3	30.4019.24R	Knob-kit, M10x35	5

(1) 30.5000.40 (2) 30.5000.80 (3) 30.5000.92 (4) 30.5030.80